IT9320

WEIGHT ASSISTED CHIN/DIP COMBO

OWNER'S MANUAL

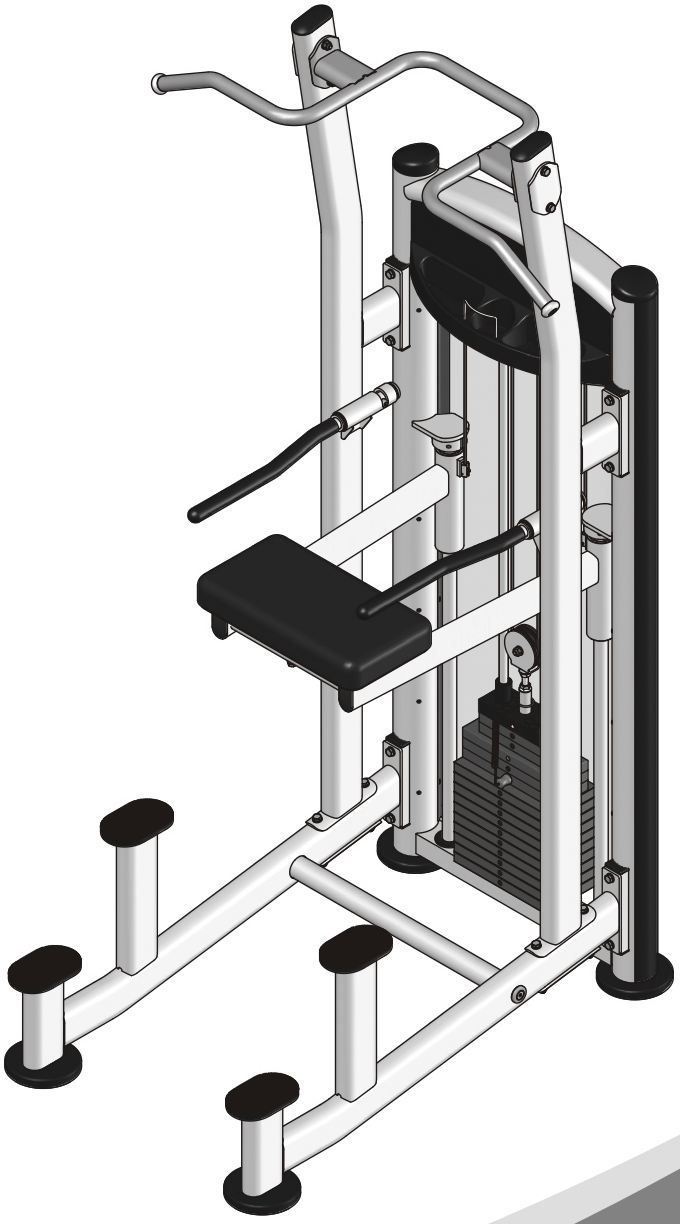

! CAUTION

Read all precautions
and instructions in this manual
before using this equipment

14Z Rev G

! CAUTION
Read all precautions and instructions in this manual before using this equipment.

Table Of Contents

Important Safety Instructions---------- 3

Instructions---------- 5

Parts List---------- 6

Exploded View---------- 8

Measurement Guide---------- 10

Assembly Instructions---------- 11

Assembly---------- 12

Adjust Instructions----------22

Exercise Instructions----------23

Maintenance Schedule---------- 24

General Maintenance Information---------- 25

Weight Training Tips---------- 26

Please assemble according to the actual **Weights and Shroud** you buy !

Important Safety Instructions

Before beginning any fitness program, you should obtain a complete physical examination from your physician. When using exercise equipment, basic precautions should always be taken, including the following:

1. Read all instructions before using the equipment.
   These instructions are written to ensure your safety and to protect the unit.

2. Use the equipment only for its intended purpose as described in this guide.
   Do not use accessory attachments that are not recommended by the manufacturer: such attachments might cause injuries.

3. The product should only be used on a level surface and is with 0.5 meters space around the product.
   Do not use the equipment outdoors.

4. Do not allow children on or near the equipment. And children are not allowed to use this equipment.
   Teenagers should use this equipment with adult supervision.

5. Do not overexert yourself or work to exhaustion.
   Do not attempt to lift more weight than you can control safely.
   If you feel any pain or abnormal symptoms, stop your workout immediately and consult your physician.

6. This equipment is not used as medical apparatus and instruments.

7. Never operate the unit when it has been dropped or damaged.
   Never drop or insert anything into any opening in the equipment.
   Always check the unit and its cables before each use. Make sure that all fasteners and cables are secure and in good working condition.
   Frayed or worn cables can be dangerous and may cause injury. Periodically check these cables for any indication of wear.
   Keep hands, limbs, loose clothing and long hair well out of the way of moving parts.

8. Be careful when getting on or off the equipment.

9. Wear proper exercise clothing and shoes for your workout, no loose clothing.

Personal Safety During Assembly
Read each step in the assembly instructions and follow the steps in sequence. Do not skip ahead. If you skip ahead, you may learn later that you have to disassemble components and that you may have damaged the equipment.

Assemble and operate the equipment on a solid, level surface. Locate the unit a few feet from walls or furniture to provide easy access. The equipment is designed for your enjoyment. By following these precautions and using common sense, you will have many safe and pleasurable hours of healthful exercise with the equipment.

Training Area and Free Area

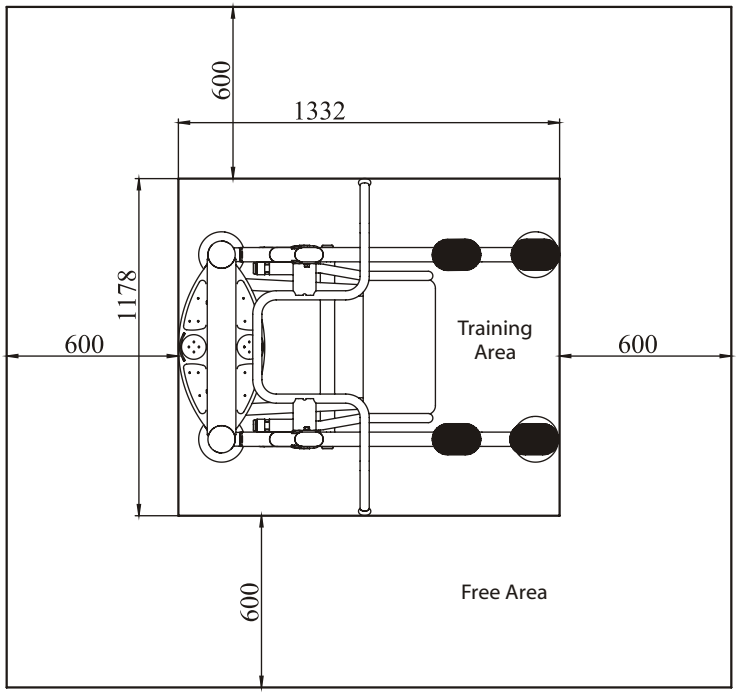

Specifications

Class: S

Maximum Wt. Capacity: 91kg/ 200lbs

Maximum User Weight: 150kg/ 330lbs

Product Total Surface: 1332*1178mm

Product Total Mass (Short Shroud): 139.2kg/ 307lbs

Instructions

Before beginning assembly please take the time to read instructions thoroughly. Please use the various lists in this manual to make sure that all parts have been included in your shipment. When ordering, use part number and description from the lists. Use only our replacement part when servicing. Failure to do so will void your warranty and could result in personal injury.

The equipment is designed to provide the smoothest, most effective exercise motion possible. After assembly, you should check all functions to ensure correct operation. If you experience problems, first recheck the assembly instructions to locate any possible errors made during assembly. If you are unable to correct the problem, call your authorized dealer. Be sure to have your serial number and this manual when calling. When all parts have been accounted for, continue on.

Tools Required

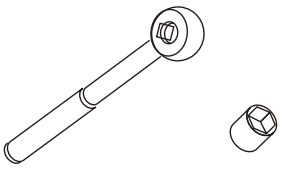

Ratchet Wrench and Socket

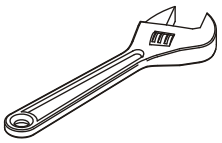

Adjustable Wrench

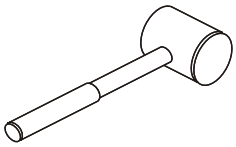

Rubber Mallet

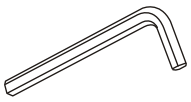

Hex Key Wrench Set

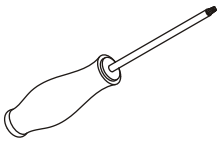

Phillips Screwdriver

Parts List

NOTE: SOME OF THESE PARTS MAY COME PRE-INSTALLED.

Item No.	Description	Qty	Item No.	Description	Qty
1	Weight Stack Frame	1	24	Button	19
2	Left Support	1	25	L Bracket	2
3	Right Support	1	26	Cable	1
4	Left Cross Brace	1	27	Plug Φ95.4*61	2
5	Right Cross Brace	1	28	Rear Shroud	1
7	Glide Support	1	29	Top Rear Shroud A	1
8	Nether Cross Brace	1	30	Top Front Shroud	1
9	Handle	1	31	Support	1
11	Handle	2	32	Rear Support	1
12	Guide Rod	2	33	Left Shroud Retainer Plate	1
13	Leg Pad	1	34	Right Shroud Retainer Plate	1
14	Doughnut Baffle	2	35	Adjustable Foot Plate	4
15	Guide Rod Φ19*1477	2	37	Plug RT50*100	2
16	Pulley Bracket	1	38	Button Φ8.1*7	14
17	Top Plate	1	39	Plastic Block	14
18	Bushing	4	40	Rubber Bumper	2
19	End Cap	4	41	Foot Cover	4
20	Aluminium Cap	2	42	Plug RT40*80	2
21	Linearity Bearing Φ30	4	43	Plastic Cover	4
22	Spring Ring	4	44	Plastic Washer	4
23	Hex Flanged Nut	2	45	Connect Button	4

Parts List

NOTE: SOME OF THESE PARTS MAY COME PRE-INSTALLED.

Item No.	Description	Qty	Item No.	Description	Qty
47	Arc Bracket	1	67	Flat Head Cap Screw M10*40	2
48	Weight Rubber Bumper	2	68	Hex Key S=3	1
49	Grip	2	69	Hex Key S=6	1
50	Selector Pin W/Coil	1	70	Hex Key S=8	1
51	3.5" Pulley	1	71	Wrench	1
52	6" Pulley	2	72	Lube	1
53	Nut	2	74	Weight Plate 5LBS	2
54	Flat Washer Φ11*Φ20*2	33	75	Weight Plate 10LBS	3
55	Nylon lock Nut M10	11	76	Weight Plate 15LBS	10
56	Hex Head Bolt M10*130	4	77	Flat Philips Screw M5*25	2
57	Split Pin Φ11*76	1	78	Rivet Nut M8	2
58	Hex Head Bolt M10*80	7	79	Screw ST4.2*10	4
59	Hex Head Bolt M10*50	3	80	Side Cover	2
60	Hex Head Bolt M8*30	2	81	Plug	8
61	Flat Philips Screw M5*16	13	82	Rubber PlugΦ29*Φ19*10	2
62	Hex Head Bolt M10*20	8	84	Spring WasherΦ8	2
63	Socket Head Cap Screw M4*15	2	85	Flat Washer Φ9*Φ22*1.6	2
64	Socket Head Cap Screw M8*25	4	86	Shroud	1
65	Socket Head Cap Screw M10*15	2	87	Top Rear Shroud	1
66	Flat Head Cap Screw M10*25	4	88	Short Shroud Retainer Plate	2

Exploded View

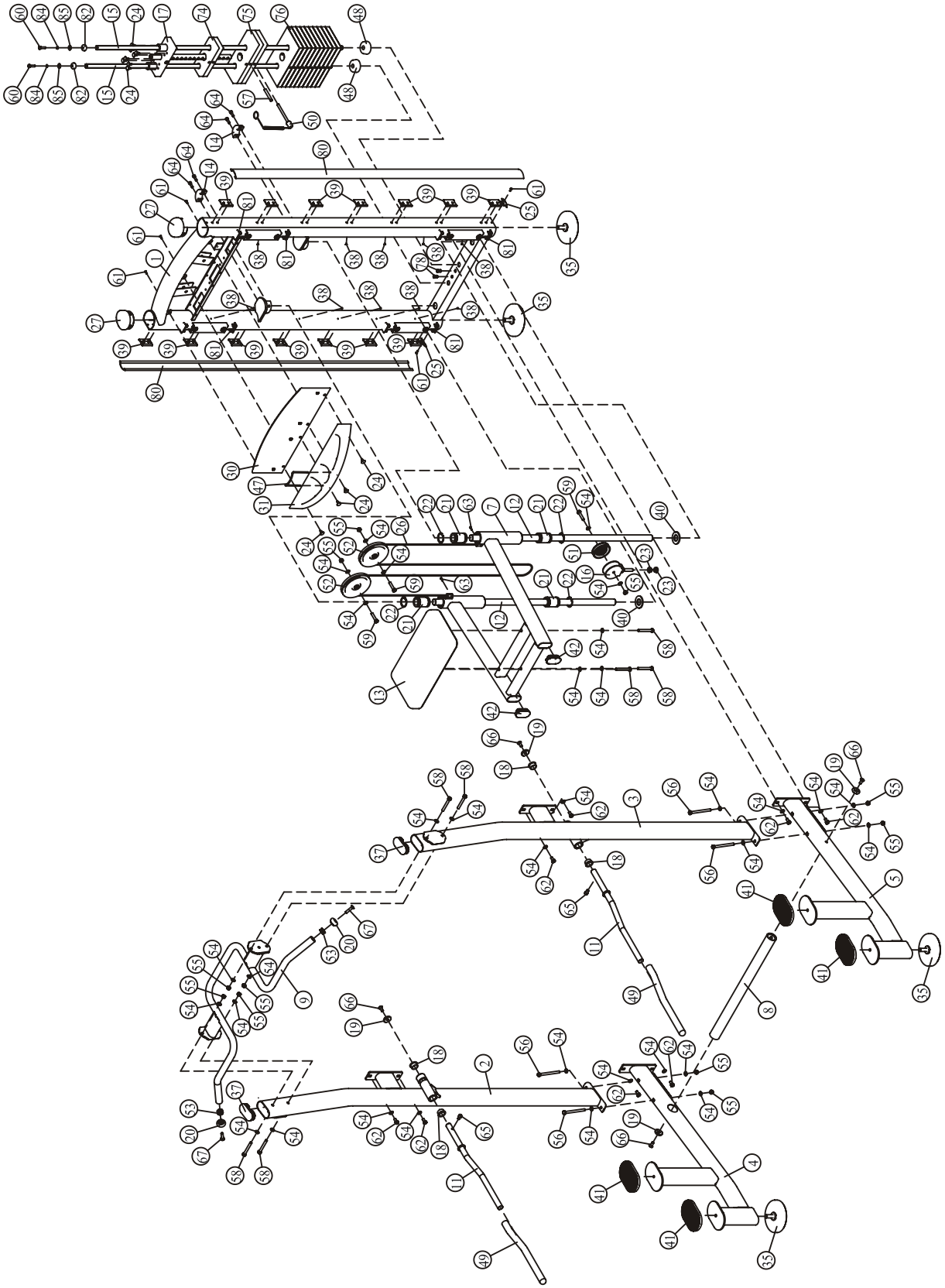

Exploded View

Flat Shroud

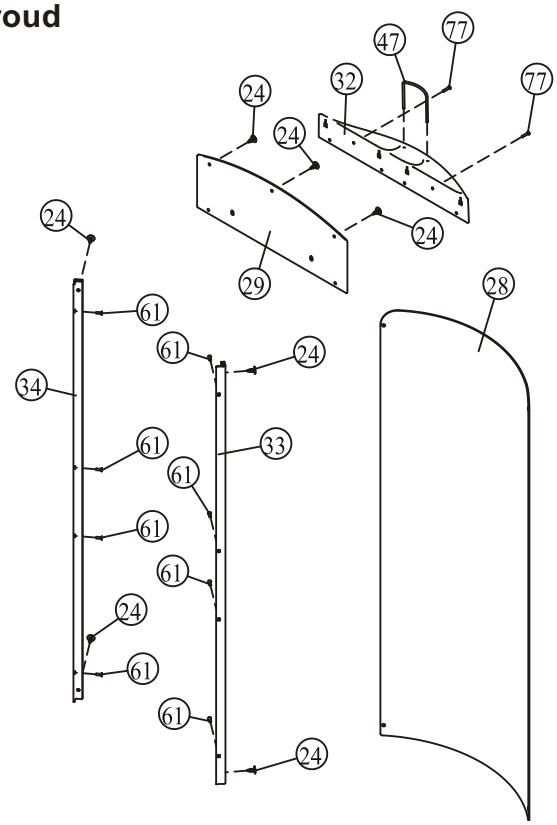

Short Shroud

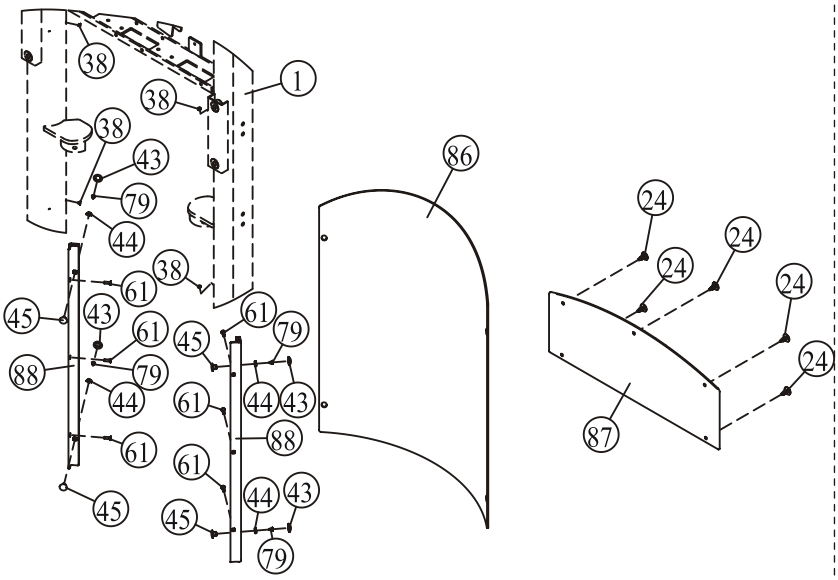

Measurement Guide

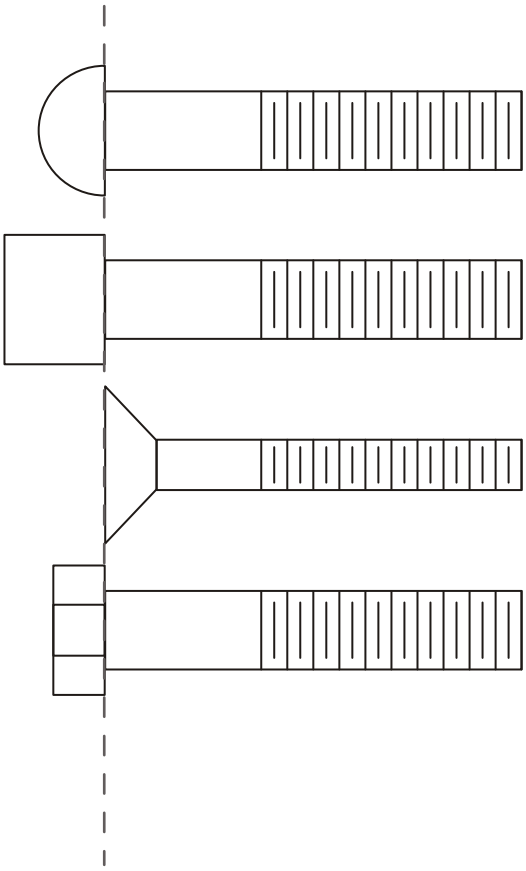

BHCS = Button Head Cap Screw

SHCS = Socket Head Cap Screw

FHCS = Flat Head Cap Screw

HHB = Hex Head Bolt

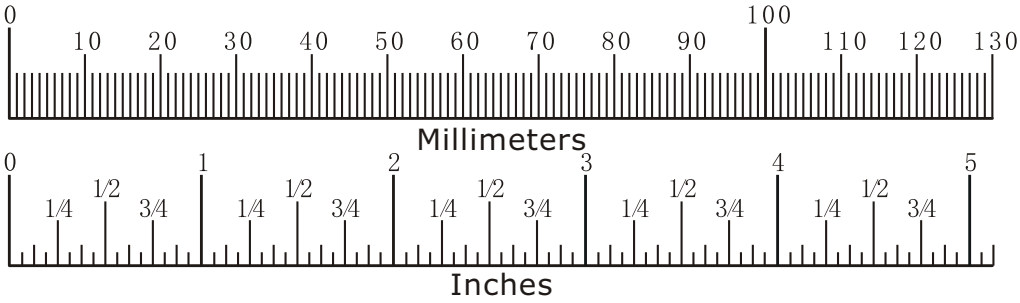

Diameter of bolt (mm/inch)	M6(1/4")	M8(5/16")	M10(3/8")	M12(1/2")	M16(5/8")
Tightening torque (N.m)	9~12	22~30	45~59	78~104	193~257
Operational methods for adult men	The strength of the wrist	The strength of the wrist and forearm	The strength of the entire arm	The strength of the arm and upper body	with all strength

Assembly Instructions

Assembly of the equipment takes professional installers about 2 hours. If this is the first time you have assembled this type of equipment, plan to spend more time. It is strongly recommended to assemble the equipment by professional installers. You may find it quicker, safer, easier to assemble this equipment with the help of a friend, as some of components may be large, heavy or awkward to handle alone. It is important that you assemble your product in a clean, clear, uncluttered area. This will enable you to move around the product while you are fitting components and reduce the possibility of injury during assembly.

⚠ NOTE

As with any assembled part, proper alignment and adjustment is critical. While tightening the fasteners, be sure to leave room for adjustments. Do not fully tighten the fasteners until instructed to do so. Be careful to assemble the components in the sequence presented in this guide.

STEP 1

1. Attach two Adjustable Foot Plate (#35) to the Weight Stack Frame (#1).
2. Attach one Left Shroud Retainer Plate (#33) & one Right Shroud Retainer Plate (#34) to the Weight Stack Frame (#1) using:
   eight M5*16 Flat Philips Screw (#61)
3. Attach ten Φ8.1*7 Button (#38) to the Weight Stack Frame (#1).

Note: Wrench Tighten Screws.

Here is the assembly instruction for **Flat Shroud !**

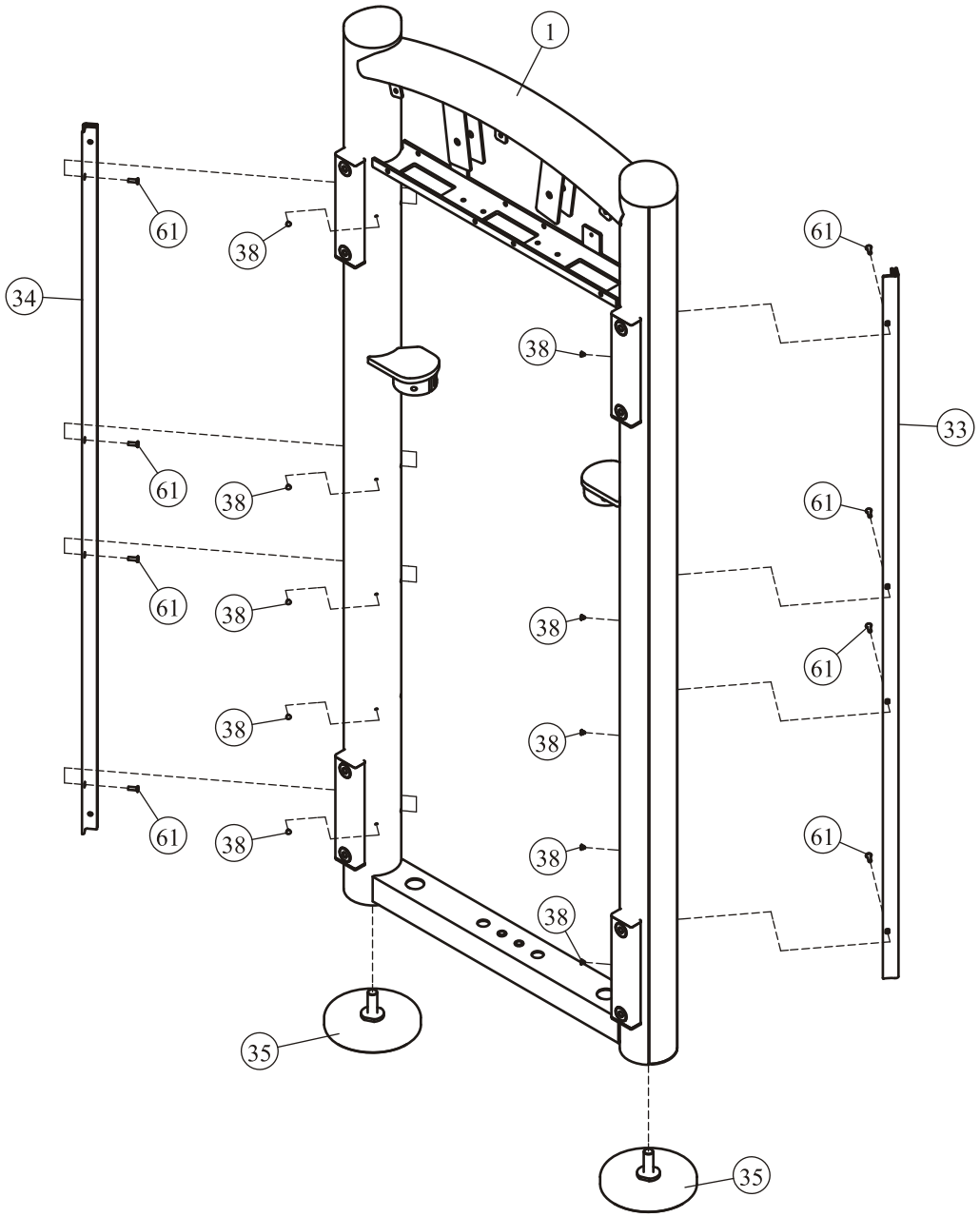

STEP 1

1. Attach two Adjustable Foot Plate (#35) to the Weight Stack Frame (#1).
2. Attach two Short Shroud Retainer Plate (#88) to the Weight Stack Frame (#1) using:
   six M5*16 Flat Philips Screw (#61)
3. Attach fourteen Φ8.1*7 Button (#38) to the Weight Stack Frame (#1).

Note: Wrench Tighten Screws.

Here is the assembly instruction for **Short Shroud !**

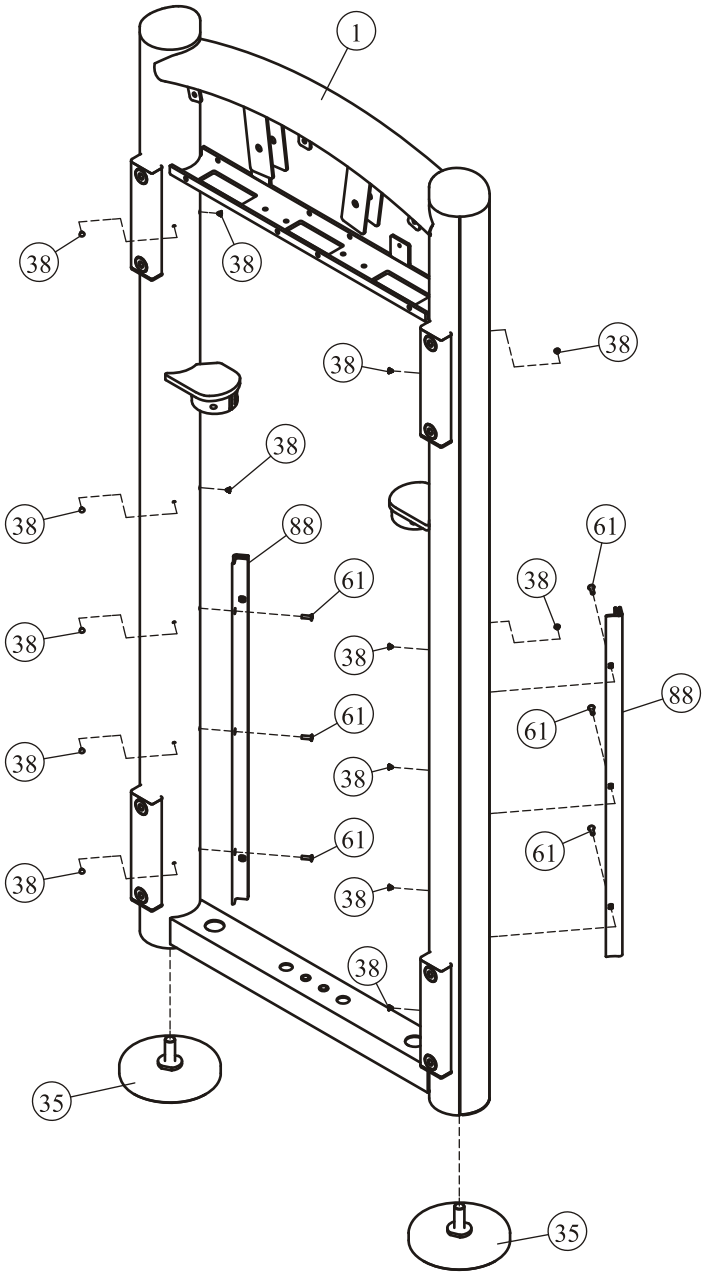

STEP 2

1. Attach two Adjustable Foot plate (#35) to the Left Cross Brace (#4) and the Right Cross Brace (#5).
2. Attach the Nether Cross Brace (#8) to the Left Cross Brace (#4) and the Right Cross Brace (#5) using:
   two Φ38*Φ10.5*8 End Cap (#19) two M10*25 FHCS (#66)
3. Attach the Left Cross Brace (#4) and the Right Cross Brace (#5) to the Weight Stack Frame (#1) using:
   four M10*20 HHB (#62) four Φ11*Φ20*2 Flat Washer (#54)

Note: Hand tighten Bolts and Nylon Lock nuts.

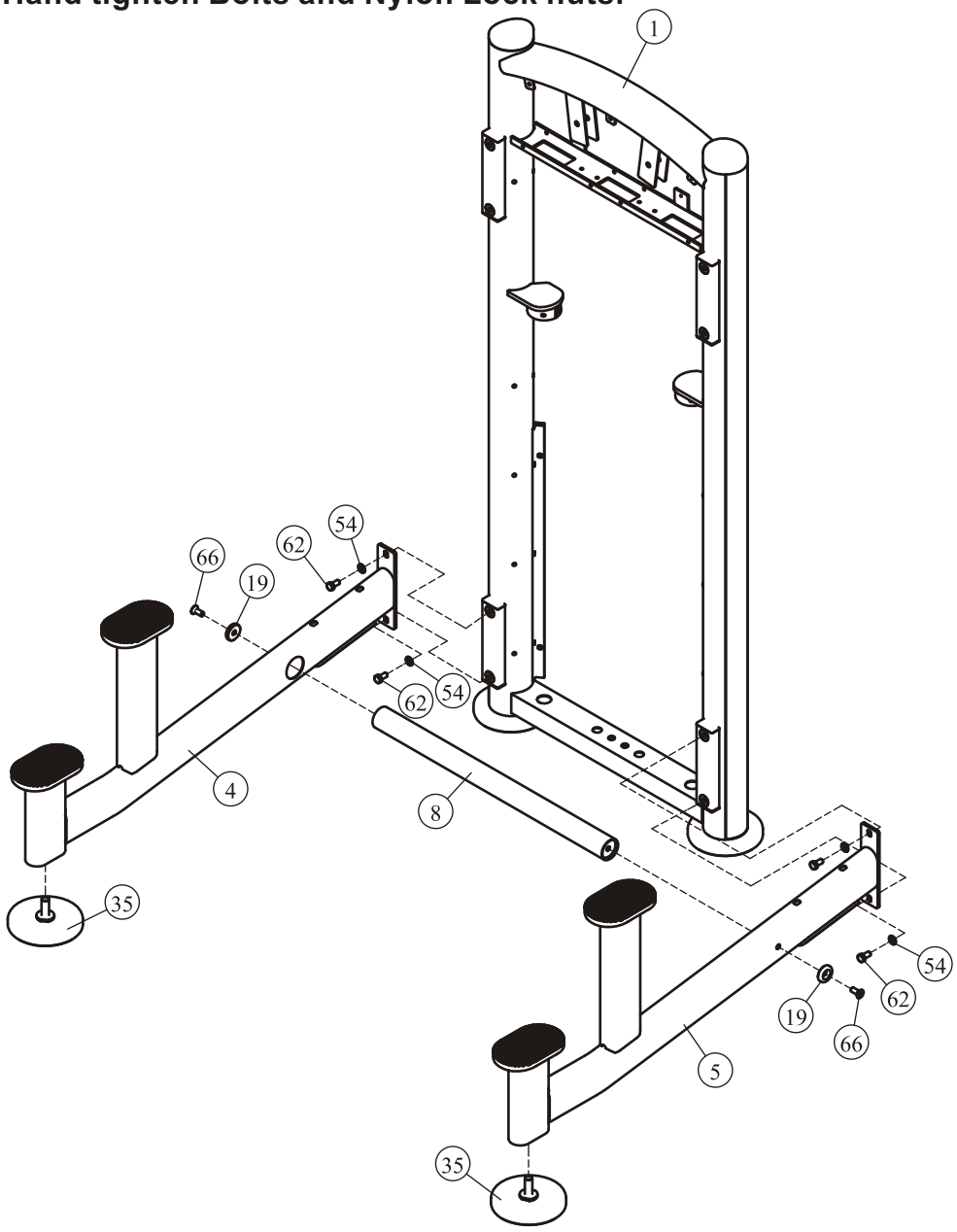

STEP 3

1. Attach the Left Support (#2) to the Left Cross Brace (#4) and the Weight Stack Frame (#1) using:
   two M10*20 HHB (#62) — two M10*130 HHB (#56)
   six Φ11*Φ20*2 Flat Washer (#54) — two M10 Nylon lock Nut (#55)
2. Attach the Right Support (#3) to the Right Cross Brace (#5) and the Weight Stack Frame (#1) using:
   two M10*20 HHB (#62) — two M10*130 HHB (#56)
   six Φ11*Φ20*2 Flat Washer (#54) — two M10 Nylon lock Nut (#55)

Note: Hand tighten Bolts and Nylon Lock nuts.

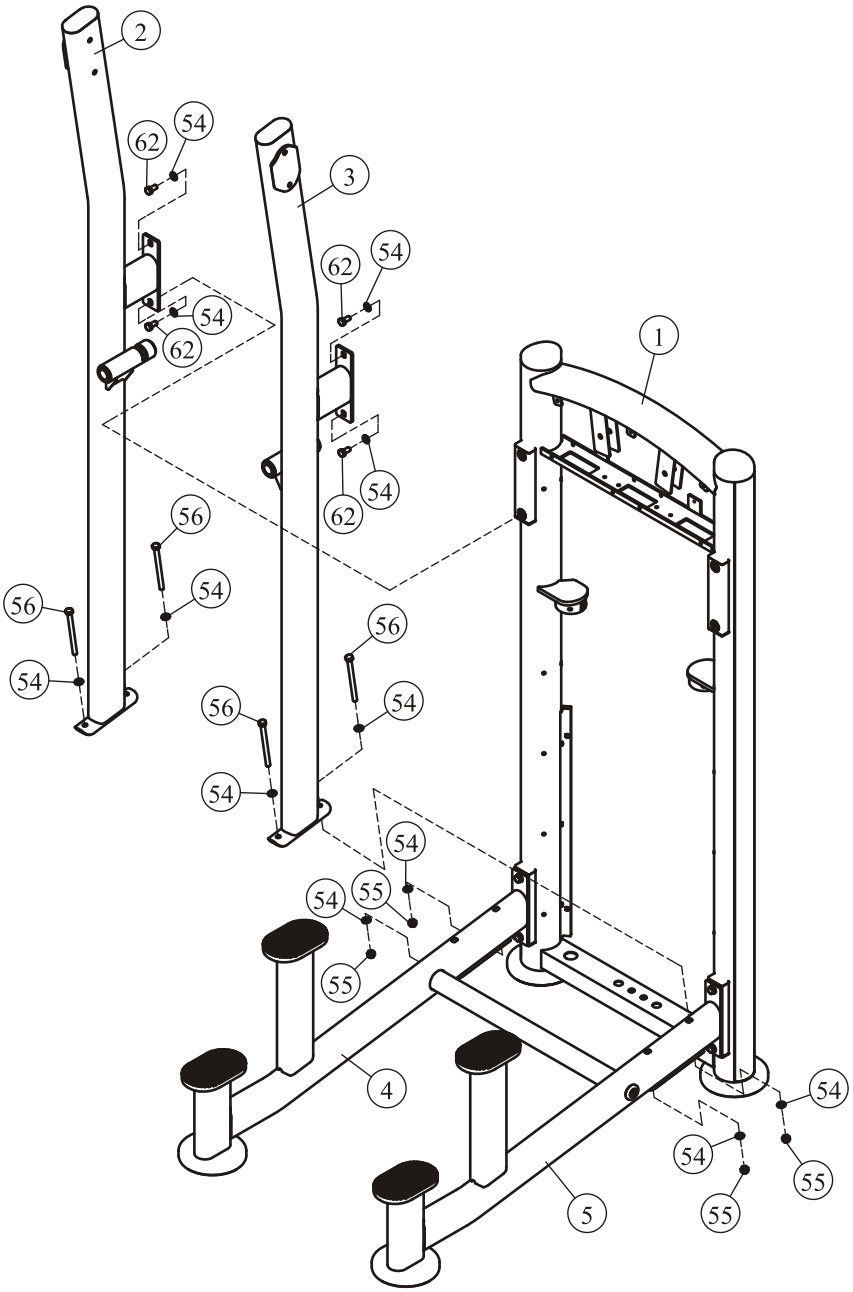

STEP 4

1. Attach the Leg Pad (#13) to the Glide Support (#7) using:
   three M10*80 HHB (#58) three Φ11*Φ20*2 Flat Washer (#54)
2. Attach the Glide Support (#7) and two Guide Rod (#12) to the Weight Stack Frame (#1) using:
   two Φ72*Φ31*20 Doughnut Baffle (#14) two Φ60*Φ30.1*4.5 Rubber Bumper (#40)
   four M8*25 SHCS (#64)

Note: Wrench Tighten Bolts and Nylon Lock nuts.

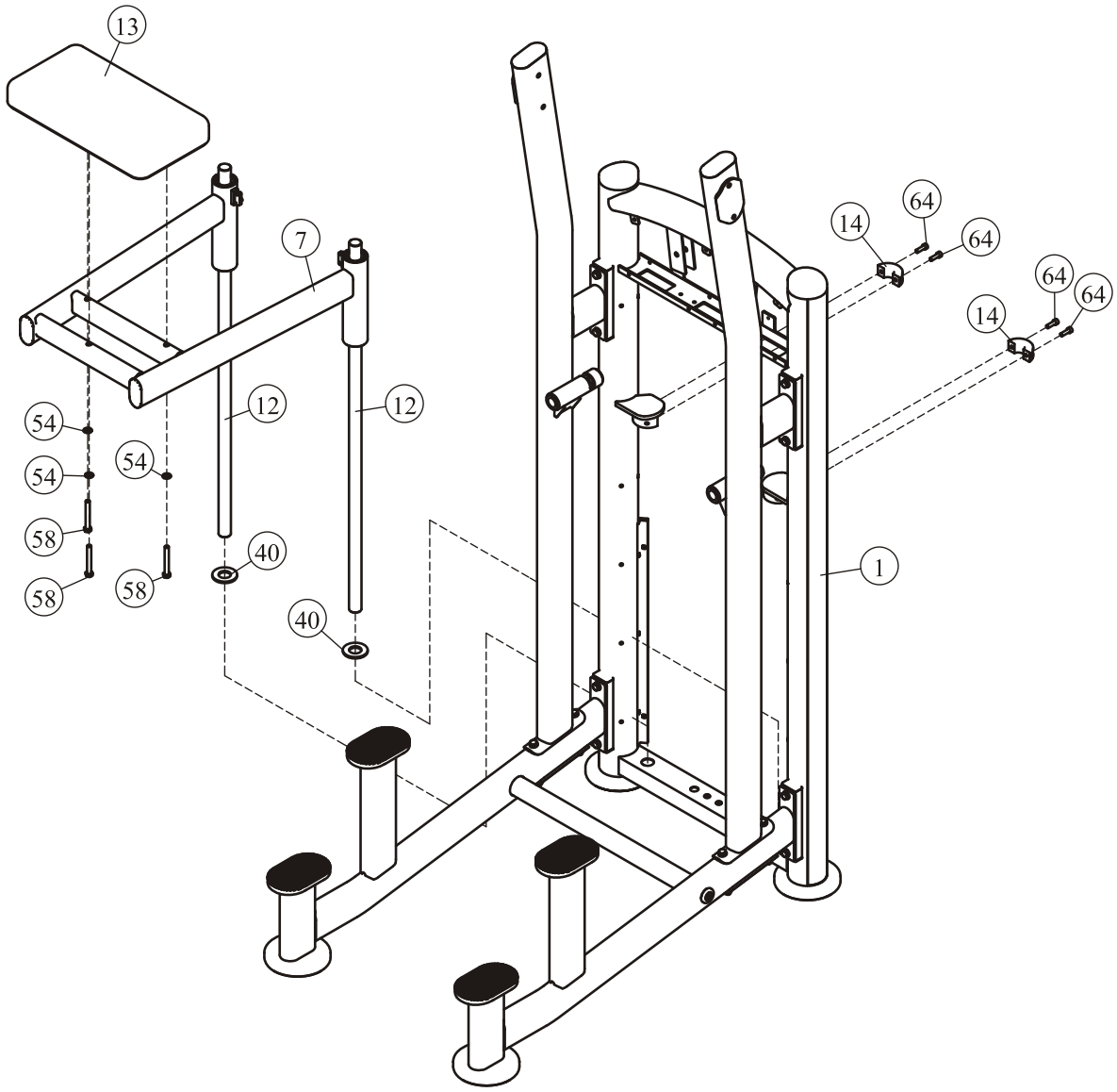

STEP 5

1. Attach the Handle (#9) to the Left Support (#2) and the Right Support (#3) using:
   four M10*80 HHB (#58) eight Φ11*Φ20*2 Flat Washer (#54)
   four M10 Nylon lock Nut (#55)
2. Attach two handle (#11) to the Left Support (#2) and the Right Support (#3) using:
   two Φ38*Φ10.5*8 End Cap (#19) two M10*25 FHCS (#66)
   two M10*15 SHCS (#65)

Note: Wrench Tighten Bolts and Nylon Lock nuts.

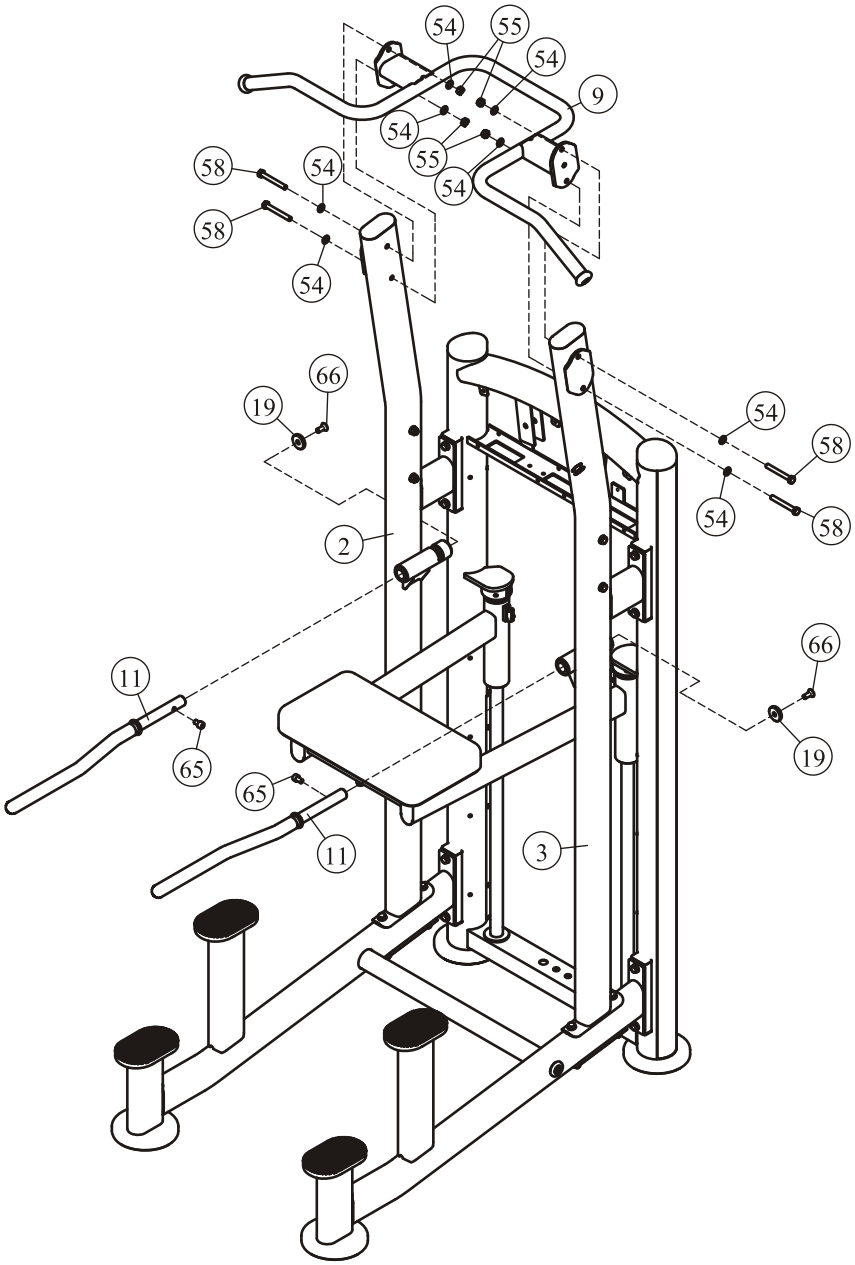

STEP 6

1. Attach:

two Φ19*1477 Guide Rod (#15)
ten Weight Plate 15LBS (#76)
two Weight Plate 5LBS (#74)
two Φ63.5*Φ19*25.4 Weight Rubber Bumper (#48)
three Weight Plate 10LBS (#75)
one Top Plate (#17)

to the Weight Stack Frame (#1) using:

two M8*30 HHB (#60)
two Φ9*Φ22*1.6 Flat Washer (#85)
two Φ8 Spring Washers (#84)
two Φ29*Φ19*10 Rubber Plug (#82)

2. Attach the Split Pin (#57) to the fourth Weight Plate (#75) from above.
3. Attach the Selector Pin W/Coil (#50) & eight Button (#24) to the Top Plate (#17).

Note: Wrench Tighten Bolts and Nylon Lock nuts.

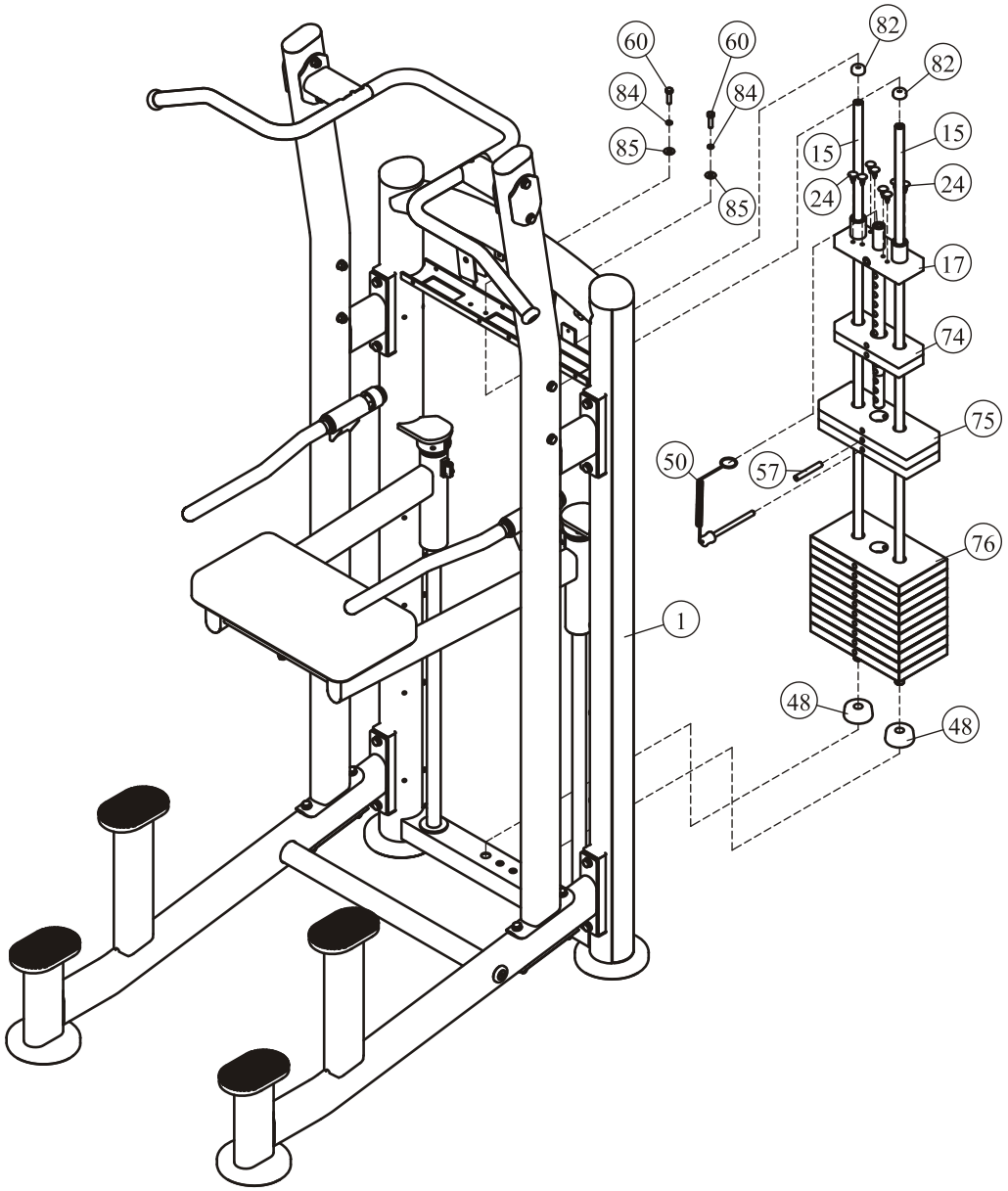

STEP 7

1. Attach the Pulley Bracket (#16) to the Top Plate (#17) using:
   two 1/2"-13 Hex Flanged Nut (#23)
2. Attach one 3.5" Pulley (#51) to the Pulley Bracket (#16) using:
   one M10*50 HHB (#59) two Φ11*Φ20*2 Flat Washer (#54)
   one M10 Nylon lock Nut (#55)
3. Attach two 6" Pulley (#52) to the Weight Stack Frame (#1) using:
   two M10*50 HHB (#59) four Φ11*Φ20*2 Flat Washer (#54)
   two M10 Nylon lock Nut (#55)
4. Attach the Cable (#26) to the Glide Support (#7) using:
   two M4*15 SHCS (#63)

Note: Wrench Tighten Bolts and Nylon Lock nuts.

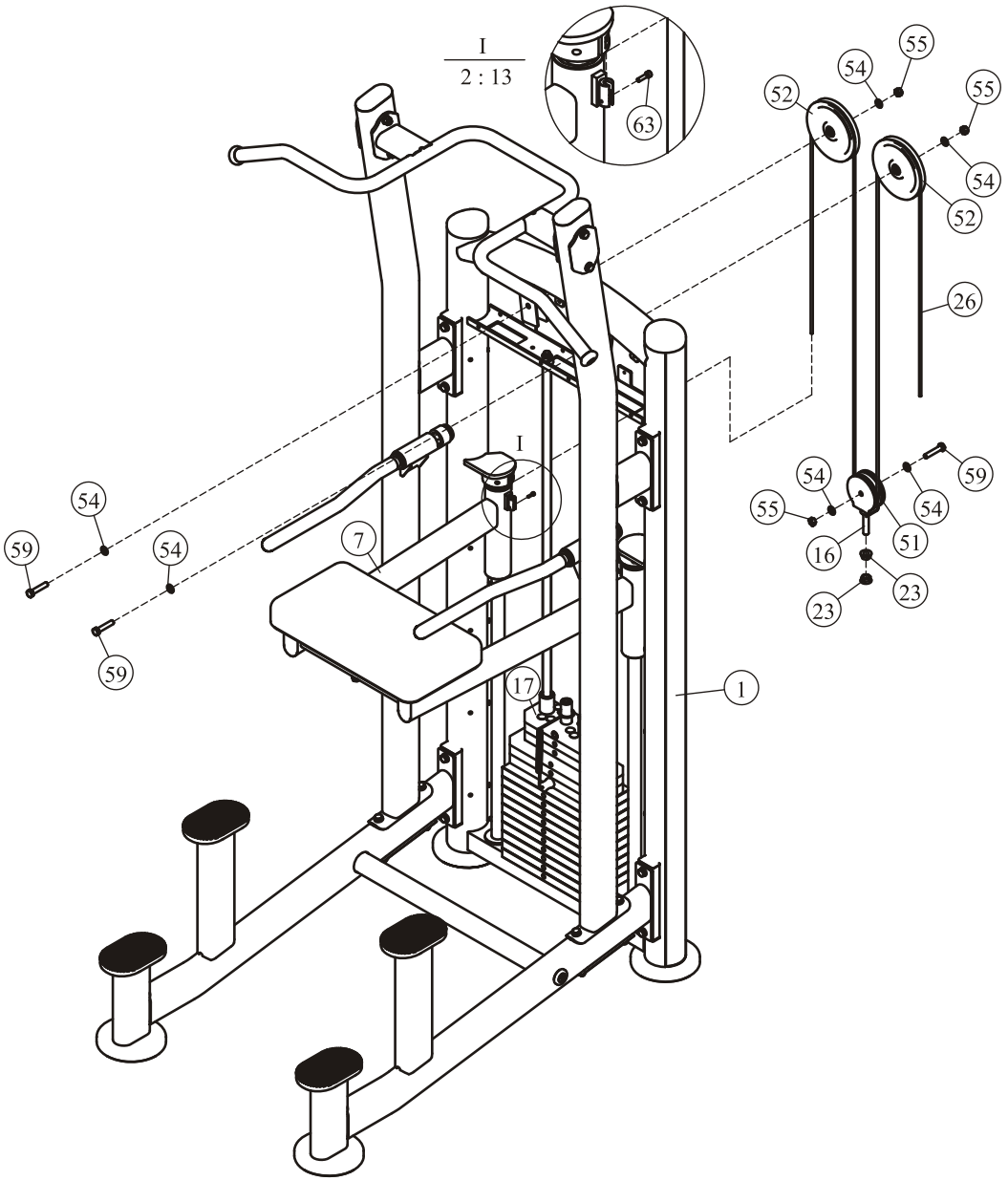

STEP 8

1. Attach the Rear Shroud (#28) to the Weight Stack Frame (#1) using:
   four Button (#24)
2. Attach the Top Front Shroud (#30) to the Weight Stack Frame (#1) using:
   four Button (#24) three M5*16 Flat Philips Screw (#61)
3. Attach the Top Rear Shroud A (#29) & the Rear Support (#32) to the Weight Stack Frame (#1) using:
   three Button (#24) two M5*25 Flat Philips Screw (#77)

Note: Wrench Tighten Bolts and Nylon Lock nuts.

Here is the assembly instruction for **Flat Shroud !**

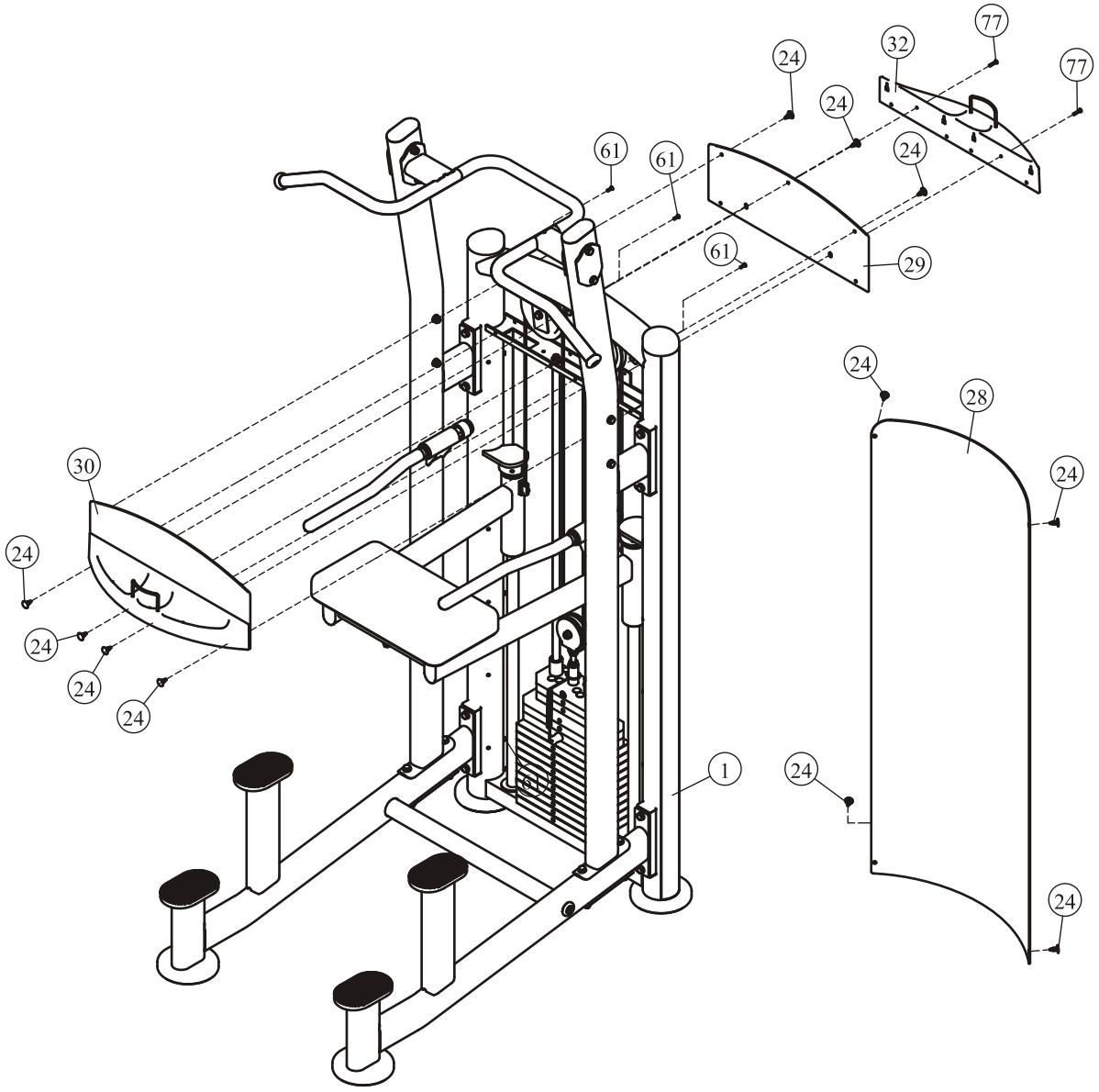

STEP 8

1. Attach the Shroud (#86) to the Weight Stack Frame (#1) using:
   four Connect Button (#45) four Plastic Washer (#44)
   four ST4.2*10 Self-Tapping Screw (#79) four Plastic Cover (#43)
2. Attach the Top Front Shroud (#30) to the Weight Stack Frame (#1) using:
   four Button (#24) three M5*16 Flat Philips Screw (#61)
3. Attach the Top Rear Shroud (#87) to the Weight Stack Frame (#1) using:
   five Button (#24)

Note: Wrench Tighten Bolts and Nylon Lock nuts.

Here is the assembly instruction for **Short Shroud !**

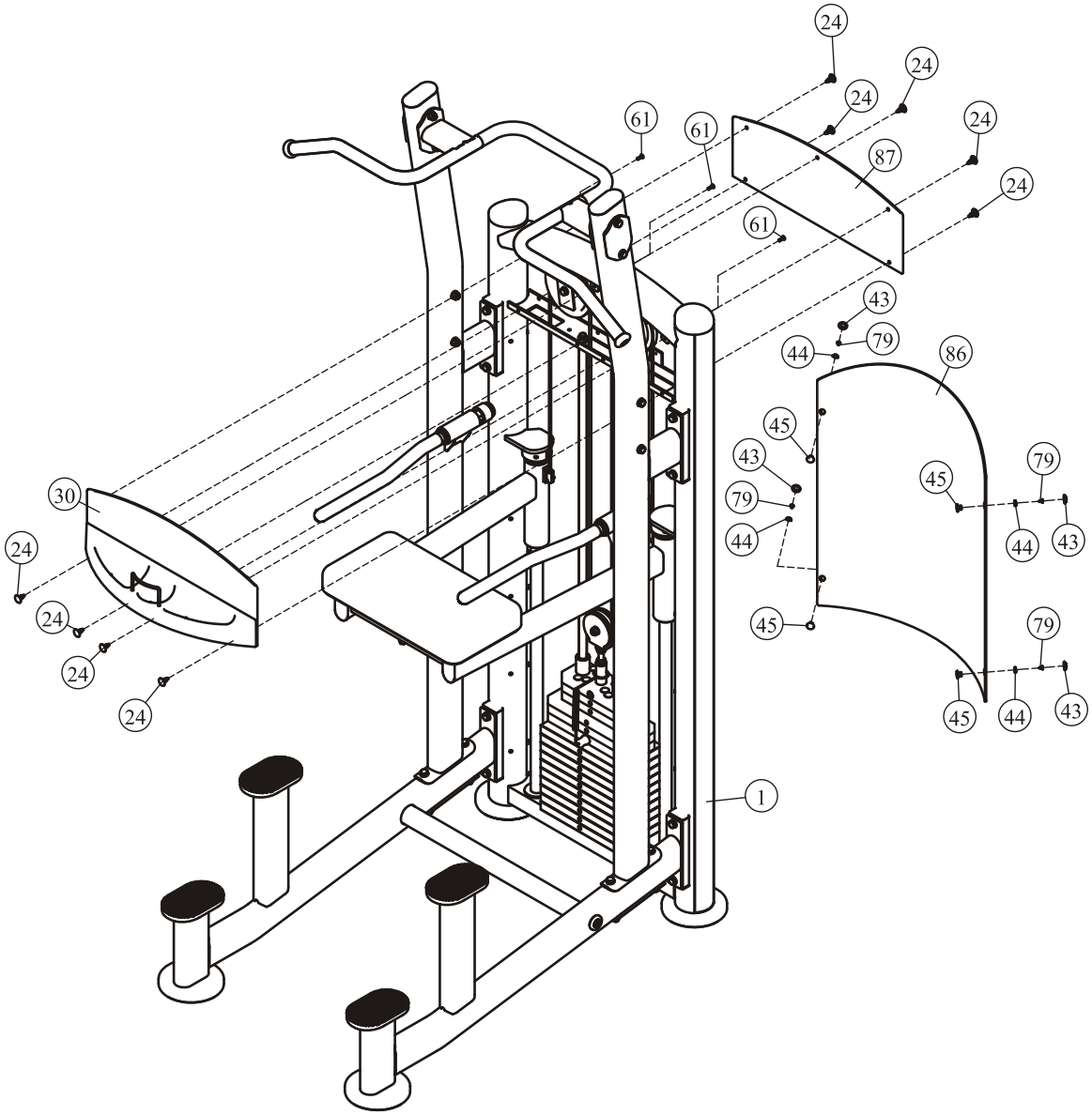

Adjust Instructions

Handle adjustment

Rotation the Handle and adjust the Handle to the desired position.

The use of Selector Pin

1. Select an appropriate weight and put the Selector Pin into the hole on it.
2. Make sure the Selector Pin gets into the hole completely.

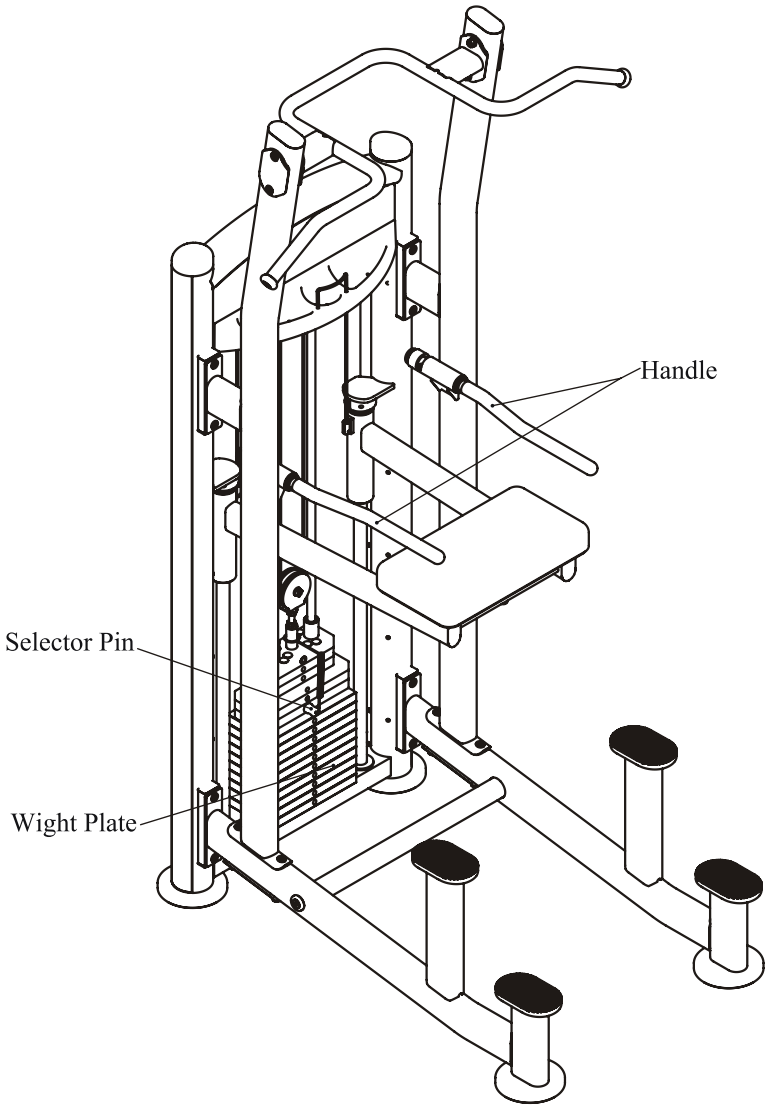

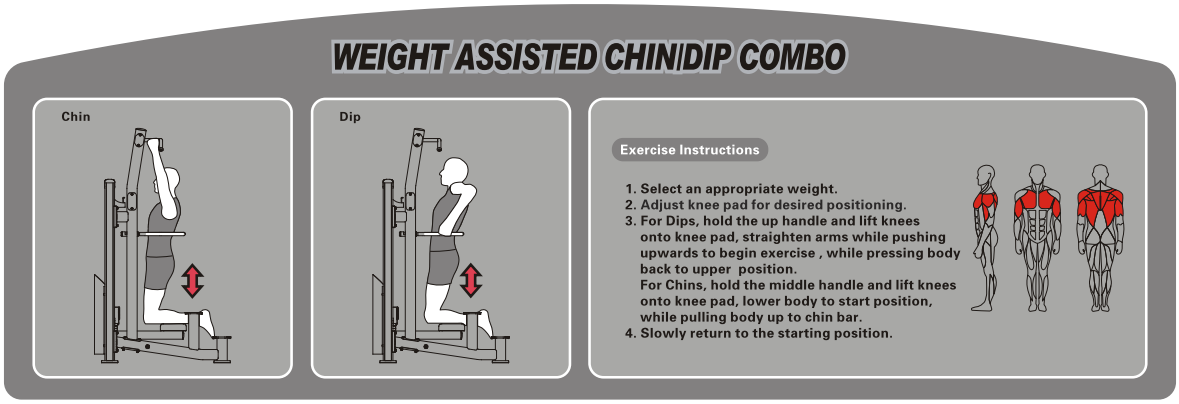

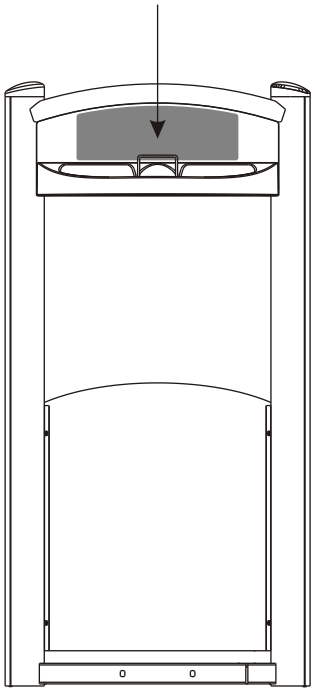

Exercise Instructions

1. Select an appropriate weight.
2. Adjust knee pad for desired positioning.
3. For Dips, hold the up handle and lift knees onto knee pad, straighten arms while pushing upwards to begin exercise , while pressing body back to upper position.
   For Chins, hold the middle handle and lift knees onto knee pad, lower body to start position, while pulling body up to chin bar.
4. Slowly return to the starting position.

(Adjust weight according to the select pin)

Maintenance Schedule

ROUTINE	COMMERCIAL MAINTENANCE	HOME MAINTENANCE	LATEST DATE ENTRY						
Inspect; Links, Pull Pins, Snap Locks, Swivels, Weight Stack Pins	DAILY	WEEKLY							
Clean; Upholstery	DAILY	WEEKLY							
Inspect; Cables or Belts and their tension	DAILY	WEEKLY							
Inspect; Accessory Bars, and Handles	WEEKLY	3 MONTHS							
Inspect; All Decals	WEEKLY	3 MONTHS							
Inspect; All Nuts and Bolts, Tighten if needed	WEEKLY	3 MONTHS							
Inspect; Anti-Skid Surface	WEEKLY	3 MONTHS							
Clean & Lubricate; Guide Rods with a Teflon (PTFE) based lubricant (Superlube)	MONTHLY	3 MONTHS							
Lubricate; Seat Sleeves, Turcite Bushings, Linear Bearing	MONTHLY	3 MONTHS							
Clean and Wax; All Glossy Finishes	6 MONTHS	YEARLY							
Repack with Grease; Linear Bearings	6 MONTHS	YEARLY							
Replace; Cables, Belts and Connecting Parts	YEARLY	3 YEARS							

Your equipment comes with a commercial maintenance decal. For personal, in home use, please follow the home maintenance schedule listed above.

General Maintenance Information

Links, Pull-Pins, Snap Hooks, Swivels, Weight Stack Pins:
* Check all pieces for signs of visible wear or damage.
* Check springs in snap hooks and pull-pins for proper tension and alignment.
* If the spring sticks or has lost its rigidity, replace it immediately.

Upholstery:
* To ensure prolonged upholstery life and proper hygiene, all upholstered pads should be wiped down with a damp cloth after every workout.
* Periodically take the time to use a mild soap or an approved vinyl upholstery cleaner to deter the onset of cracking or drying. Avoid using any abrasive cleaners or cleaners not intended for use on vinyl.
* Replace ripped or warn upholstery immediately.
* Keep sharp or pointed objects clear of all upholstery.

Decals:
* Inspect and familiarize yourself with any safety warnings or other user information posted on each decal.

Nuts and Bolts:
* Inspect all nuts and bolts for any loosening and tighten if needed.
* Go through a re-tightening sequence periodically to ensure that all hardware is tensioned proper.

Anti-Skid Surfaces:
* These surfaces are designed to supply secure footing and need to be replaced if they appear worn or become slippery.

Belts and Cables:
* We uses only high quality belt, and mil-spec cables.
* Visually inspect the belts and cables for fraying, cracking, peeling or discoloration.
* While the machine is not in use, carefully run your fingers along the belt or cable to feel for thinning or bulging areas.
* Replace belts and cables immediately at the first signs of damage or wear. Do not use equipment until belts or cables have been replaced.

Belt and Cable Tension:
* Referring to the Owners Manual, when belts or cables are used check all bolts attachments to be sure they are properly attached.
* Check slack in cables and re-adjust cable tension if needed.

Seat Sleeves, Guide Rods:
* Wipe down adjusting tubes with a dust free rag before applying lubricant.
* Lubricate seat sleeves and Guide Rods with a Silicon or Teflon based lubricant spray.

Linear Bearings:
* Referring to the Owners Manual carefully disassemble the bearing from its housing and place a finger full of light grease (lithium, super lube, etc.) into the inside of the bearing. Using your finger, press the grease into the ball-bearings and their tracks. repeat until the ball-bearing tracks are full of grease. Insert the shaft back into the bearing and wipe off excess grease.

PLEASE KEEP THIS FOR YOUR RECORDS

Weight Training Tips

Use this manual to guide you through the basic exercises you can perform on your equipment. To gain maximum results and avoid possible injury, consult a fitness professional to develop your complete exercise program.

Always consult your physician before starting any exercise program.

To be successful in your exercise program, it is important to develop an understanding of the basic principles of strength training. Now that you have your equipment, it is only natural that you want to get started immediately. First, determine a set of realistic goals and objectives for yourself. By deciding on an exercise plan that is right for you prior to starting, you will contribute significantly to your success.

Warm up properly before engaging in weight resistance training. Stretching, yoga, jogging, calisthenics or other cardiovascular exercise can help prepare your body for the heavier workload of lifting weights.

Learn how to perform the exercise correctly before using heavy weight. Correct form is important to avoid injury and to ensure that you work the proper muscle groups.

Know your limitations. If you are new to weight training or are embarking on an exercise regimen after a long layoff, start slowly and build foundational strength over a longer period of time.

Pay attention to your breathing. Exhale when you exert is a general rule of thumb. Never hold your breath.

SYSTEM CERTIFICATION ISO 9001 SGS
SYSTEM CERTIFICATION ISO 14001 SGS
SYSTEM CERTIFICATION OHSAS 18001 SGS
SYSTEM CERTIFICATION ISO 10015 SGS